587401 REV. A

REV.	DESCRIPTION OF REVISION	APRV.
A 11/11/04	EYELETS WERE SINGLE WIRE.	J.P.H. 11/11/04

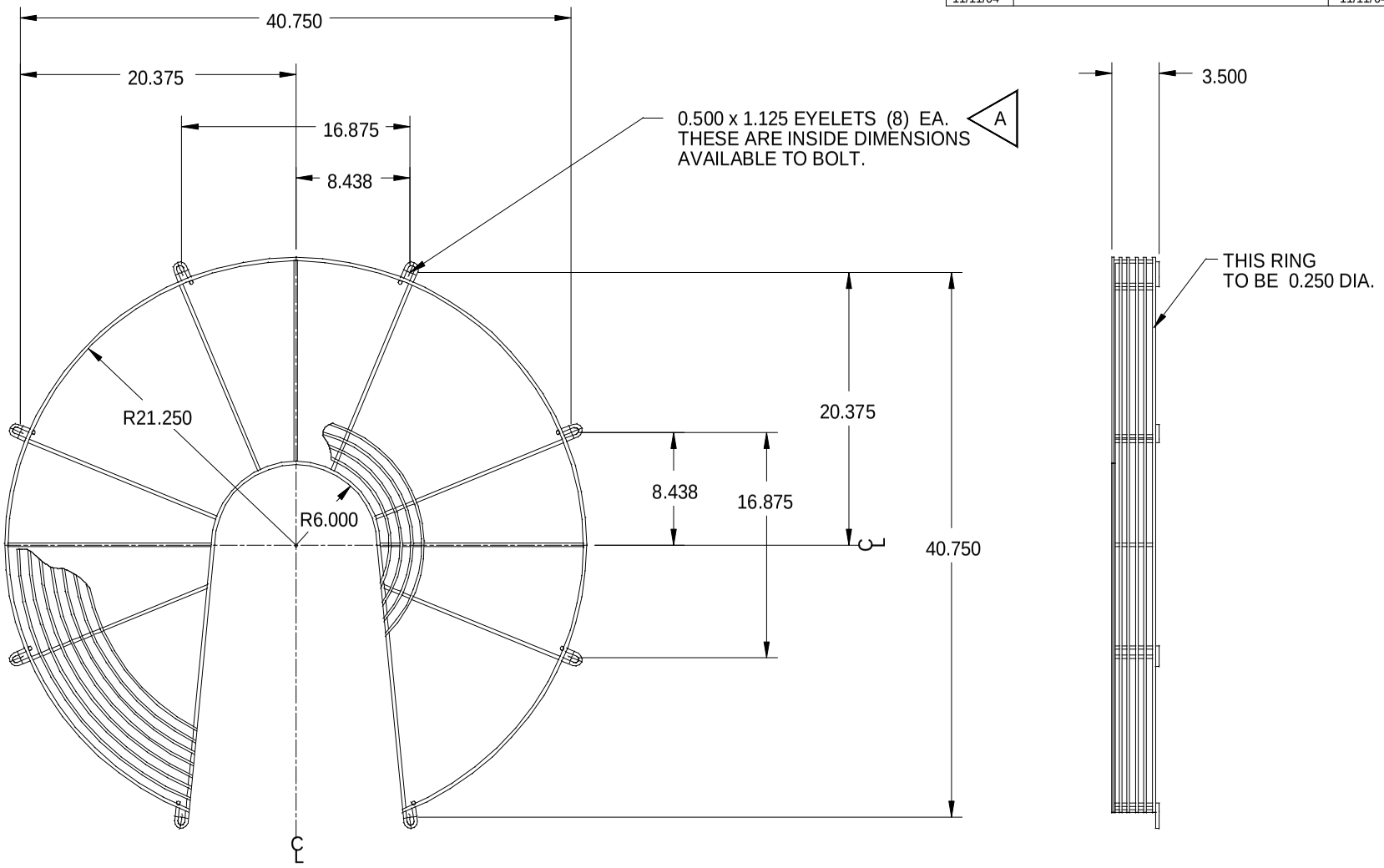

REPLACES DD#5124143

NOTES:

1) 0.250 DIA. RIBS.
2) 0.187 DIA. RINGS EXCEPT WHERE NOTED.
3) FINISH IN BRIGHT ZINC.
4) STANDARD WIRE SPACING.

WEIGHT: ******	APROX. CAP. : ******
SKD # : ******	FOLDER: ******

BDRTMP 8	(1:12)	
TOL: ± .063	UNLESS SPECIFIED	
DRN.	J.P.H.	11/11/04
CHK.		
APRV.		

ITEM	QTY.	PART NO. -- REV.	MATERIAL -- DESCRIPTION

ATLAS RADIATOR, INC.
824 N. CHAPARRAL ST.
CORPUS CHRISTI, TEXAS 78401

TOP ASSEMBLY
FAN GUARD 40"

C.P.N.	PART NO.	REV.
	587401	A